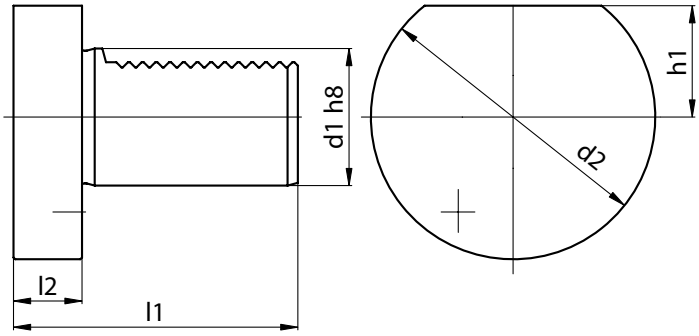

BLANKING PLUGS

Order Code	£	d1	d2	h1	l1	l2
Z2-16S	**£14.56**	**16**	40	18	45	13
Z2-20S	**£14.56**	**20**	50	23	56	16
Z2-25S	**£15.60**	**25**	58	25	64	16
Z2-30S	**£15.60**	**30**	68	28	71	16
Z2-40S	**£19.76**	**40**	83	32.5	83	20
Z2-50S	**£26.00**	**50**	98	35	98	20
Z2-60S	**£30.16**	**60**	123	42.5	114	20
Z2-80S	**£107.12**	**80**	158	55	144	20

Blanking plugs made from steel

ASSEMBLY SUPPORTS

Order Code	£	VDI
237-32190	**£206.96**	16
237-32290	**£206.96**	20
237-32390	**£206.96**	25
237-32490	**£206.96**	30
237-32590	**£206.96**	40
237-32690	**£338.00**	50
237-32790	**£338.00**	60
237-32890	**£414.96**	80

"This system allows for assembly and disassembly operations of VDI toolholders in horizontal and vertical positions, providing safe and simple tool handling"

ACCESSORIES Reduction Sleeves

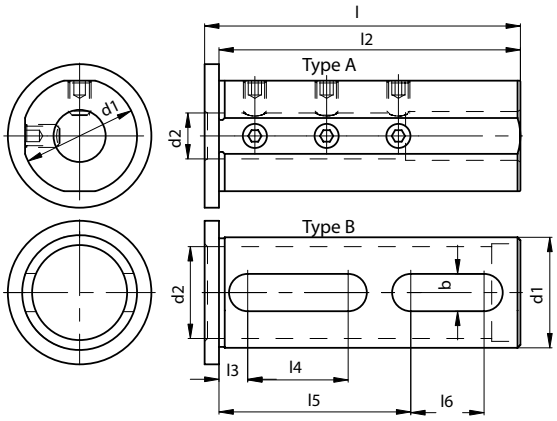

TOOL HOLDER REDUCTION SLEEVES

Order Code	£	d1	d2	l1	l2	l3	l4	l5	l6	b	Type
115-62573	**£39.52**	**25**	6	65	60	-	-	-	-	-	A
115-62538	**£39.52**	**25**	8	65	60	-	-	-	-	-	A
115-62539	**£39.52**	**25**	10	65	60	-	-	-	-	-	A
115-62540	**£39.52**	**25**	12	65	60	-	-	-	-	-	A
115-62541	**£42.64**	**25**	16	65	60	9	13	37	12	11	B
165-63222	**£39.52**	**32**	6	90	85	-	-	-	-	-	A
115-63260	**£44.72**	**32**	8	90	85	-	-	-	-	-	A
115-63261	**£44.72**	**32**	10	90	85	-	-	-	-	-	A
115-63211	**£44.72**	**32**	12	90	85	-	-	-	-	-	A
115-63212	**£44.72**	**32**	16	90	85	-	-	-	-	-	A
115-63213	**£44.72**	**32**	20	90	85	-	-	-	-	-	A
115-63214	**£46.80**	**32**	25	90	85	9	25	52	22	11	B
165-64074	**£52.00**	**40**	6	110	105	-	-	-	-	-	A
115-64043	**£46.80**	**40**	8	110	105	-	-	-	-	-	A
115-64044	**£46.80**	**40**	10	110	105	-	-	-	-	-	A
115-64045	**£46.80**	**40**	12	110	105	-	-	-	-	-	A
115-64046	**£46.80**	**40**	16	110	105	-	-	-	-	-	A
115-64047	**£46.80**	**40**	20	110	105	-	-	-	-	-	A
115-64048	**£46.80**	**40**	25	110	105	-	-	-	-	-	A
115-64049	**£49.92**	**40**	32	110	105	10	35	65	28	13	B
115-65053	**£52.00**	**50**	12	130	125	-	-	-	-	-	A
115-65013	**£52.00**	**50**	16	130	125	-	-	-	-	-	A
115-65014	**£52.00**	**50**	20	130	125	-	-	-	-	-	A
115-65015	**£52.00**	**50**	25	130	125	-	-	-	-	-	A
115-65016	**£52.00**	**50**	32	130	125	-	-	-	-	-	A
115-65017	**£56.16**	**50**	40	130	125	10	45	75	37	13	B
115-66017	**£81.12**	**60**	20	140	135	-	-	-	-	-	A
115-66018	**£81.12**	**60**	25	140	135	-	-	-	-	-	A
115-66019	**£81.12**	**60**	32	140	135	-	-	-	-	-	A
115-66020	**£81.12**	**60**	40	140	135	-	-	-	-	-	A
115-66021	**£89.44**	**60**	50	140	135	15	40	83	58	13	B
115-68006	**£166.40**	**80**	25	150	145	-	-	-	-	-	A
115-68007	**£166.40**	**80**	32	150	145	-	-	-	-	-	A
115-68008	**£166.40**	**80**	40	150	145	-	-	-	-	-	A
115-68009	**£166.40**	**80**	50	150	145	-	-	-	-	-	A
115-68010	**£178.88**	**80**	60	150	145	25	30	80	15	14	B

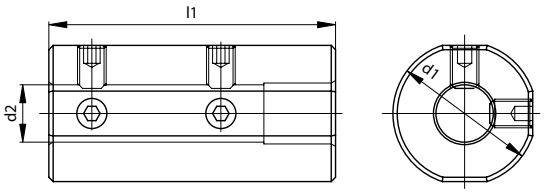

TOOL HOLDER REDUCTION SLEEVES

Order Code	£	d1	d2	l1
E2-1-20x6	**£30.16**	20	6	60
E2-1-20x8	**£30.16**	20	8	60
E2-1-20x10	**£30.16**	20	10	60
E2-1-20x12	**£30.16**	20	12	60
E2-1-25x6	**£35.00**	25	6	60
E2-1-25x8	**£35.00**	25	8	60
E2-1-25x10	**£35.00**	25	10	60
E2-1-25x12	**£35.00**	25	12	60
E2-1-32x6	**£35.00**	32	6	70
E2-1-32x8	**£35.00**	32	8	70
E2-1-32x10	**£35.00**	32	10	70
E2-1-32x12	**£35.00**	32	12	70
E2-1-32x16	**£35.00**	32	16	70
E2-1-32x20	**£35.00**	32	20	70
E2-1-40x6	**£35.00**	40	6	80
E2-1-40x8	**£35.00**	40	8	80
E2-1-40x10	**£35.00**	40	10	80
E2-1-40x12	**£35.00**	40	12	80
E2-1-40x16	**£35.00**	40	16	80
E2-1-40x20	**£35.00**	40	20	80
E2-1-40x25	**£35.00**	40	25	80

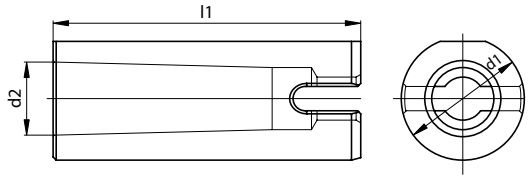

MORSE TAPER ADAPTOR SLEEVES

Order Code	£	d	MK	d2	l1
E2-3-20x1	**£36.00**	20	1	12.065	60
E2-3-20x2	**£36.00**	20	2	17.78	90
E2-3-32x1	**£41.00**	32	1	12.065	60
E2-3-32x2	**£41.00**	32	2	17.78	90
E2-3-32x3	**£45.00**	32	3	23.825	100
E2-3-40x2	**£43.00**	40	2	17.78	90
E2-3-40x3	**£47.00**	40	3	23.825	100
E2-3-40x4	**£51.00**	40	4	31.267	120
E2-3-50x2	**£49.00**	50	2	17.78	90
E2-3-50x3	**£49.00**	50	3	23.825	100
E2-3-50x4	**£53.00**	50	4	31.267	120
E2-3-60x3	**£84.00**	60	3	23.825	160
E2-3-60x4	**£84.00**	60	4	31.267	160
E2-3-60x5	**£84.00**	60	5	44.399	160

ACCESSORIES Coolant Nozzles & Extensions

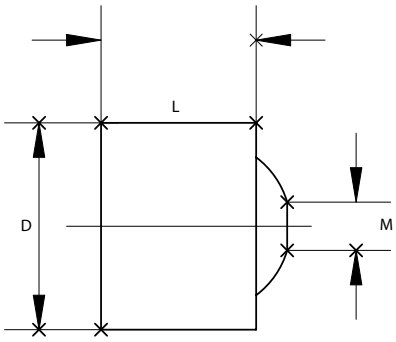

COOLANT NOZZLES

Order Code	£	D	L	M
PWZ1005D06x4,5	**£4.99**	6	5	M2,5
PWZ1008D08x06	**£4.99**	8	6	M4
PWZ1008D10x7	**£4.99**	10	7	M5
PWZ1012D12x8	**£4.99**	12	8	M6
PWZ1014D14x10	**£4.99**	14	9	M8
PWZ1016D16x12	**£4.99**	16	10	M10

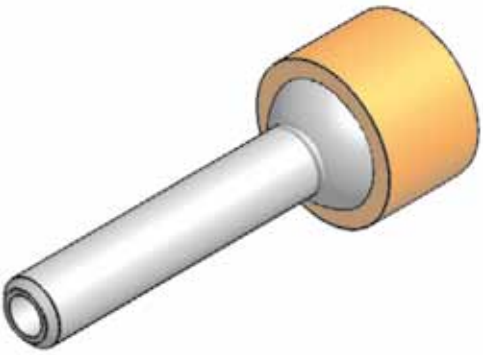

COOLANT NOZZLE EXTENSIONS

Order Code	£	M	D	L
833-00150	**£1.70**	M3	1,5	25
833-00151	**£2.30**	M4	1	30
833-00152	**£1.70**	M4	2	30
833-00153	**£2.30**	M5	2	30
833-00154	**£1.70**	M5	3	40
833-00155	**£2.50**	M6	2	35
833-00156	**£2.50**	M6	3	35
833-00157	**£1.70**	M6	4	50
833-00158	**£2.60**	M8	2	40
833-00159	**£2.60**	M8	3	40
833-00160	**£2.60**	M8	4	40
833-00161	**£1.90**	M8	5	50
833-00162	**£2.80**	M10	2	40
833-00163	**£1.80**	M10	4	40
833-00164	**£2.20**	M10	6	50
833-00165	**£2.00**	M10	8	50